IMAT Guide

IMAT 2022 Past Paper

Exam Structure

- Reading skills and knowledge acquired during studies - 4 questions
- Logical reasoning and problem-solving - 5 questions
- Biology - 23 questions
- Chemistry - 15 questions
- Physics and Mathematics - 13 questions

IMAT Scoring System

- Correct answer : +1.5 points
- Wrong answer : −0.4 points
- No answer : 0 points
- Maximum score : 90 points

Duration:
100 minutes

Questions:
60

Answer Key:
Provided after the exam questions

START TESTING
www.imatguide.com

/ imatguide

© MUR and ©University of Cambridge - UCLES.
For educational use only; answer options rearranged by IMATGUIDE.

Ministero dell'Istruzione, dell'Università e della Ricerca

#Login

ADMISSION TEST FOR THE DEGREE COURSE IN MEDICINE AND SURGERY

Academic Year 2022/2023

Cambridge Assessment Admissions Testing

© Cambridge University Press & Assessment 2022

 © Cambridge University Press & Assessment 2022

1 We have two standard forms of treatment for depression: antidepressant medication and psychological therapy. But over the last 30 years these treatments have not reduced either the prevalence of, or the disability caused by, depression: it is likely to remain a significant and largely intractable mental health problem. There are three key issues here: access, compliance and relapse. Access to treatment tends to be restricted to the minority of people who live in urban areas of wealthy countries. But even those who have access to care do not always comply with treatment recommendations – for many understandable reasons. To compound all this, high numbers of people who respond well to treatment later relapse: this is one of the reasons why depression remains so widespread.

Which one of the following best expresses the main conclusion of the above argument?

A One of the reasons why depression remains so widespread is the high rate of relapse.

B Over the past 30 years, treatments have not reduced the prevalence of or disability caused by depression.

C Depression is likely to remain a significant and largely intractable mental health problem.

D Access, compliance and relapse are the three key issues in the treatment of depression.

E Access to treatment for depression tends to be restricted to people in urban areas of wealthy countries.

2 In many countries of the world, religious and political institutions have been the main providers of mass education for children. Their motivation for founding schools has, of course, been to promote their own ideologies and recruit followers. But children at school are vulnerable and impressionable, and therefore need to be protected from having ideologies imposed upon them. Education is fundamentally incompatible with indoctrination and the promotion of particular worldviews. So the education provided in schools should be based on scientific atheism rather than religion or politics.

Which one of the following is an underlying assumption of the above argument?

A The aim of education is to offer a vision of life.

B Some governments cannot afford to fund universal education.

C Everyone needs a belief system to guide them in life.

D Scientific atheism is not an ideology.

E Many adults reject the beliefs they were taught at school.

 © Cambridge University Press & Assessment 2022

3 What is the secret of success? The question is as old as philosophy itself. The Greeks argued that it boiled down to the possession and exercise of certain character traits, such as generosity and bravery. But new research emerging from social psychology suggests you have to be self-confident to be successful. The study, involving over 200 successful people from all walks of life, comprised detailed interviews and the observation of mental and physical problem solving. The research found that all of the participants had a strong belief in their own abilities and persevered in the face of challenges because they thought they could do it. If you want to be successful, then, you must have faith in your own abilities.

Which one of the following is the best statement of the flaw in the above argument?

A It justifies a claim on the basis of how things were in the past.

B It relies on different senses of the expression 'self-confidence'.

C It ignores the significance of other factors, such as luck.

D It assumes that everyone can become self-confident.

E It assumes that self-confidence is responsible for success, and not vice versa.

4 The presence of a mind requires the presence of self-consciousness. Machines do not have self-consciousness, therefore machines do not have minds.

Which one of the following most closely parallels the reasoning used in the above argument?

A The morally best option is that which maximises benefit. Larger charities are able to provide the most benefit from donations, therefore it is morally best to choose larger charities to donate to.

B To count as an emotion, a mental state needs to have representational content. Depression does not have representational content, therefore depression is not an emotion.

C There is no obligation to keep promises to someone after they have died, since the virtue of keeping promises is to promote the promisee's wellbeing, and their capacity for wellbeing ceases upon death.

D Trust and reliance are not the same thing, because trust is a mental attitude, whereas reliance is not.

E Only true beliefs can be knowledge. My belief that the world is spherical is true, therefore I know that the world is spherical.

 © Cambridge University Press & Assessment 2022

5 Individuals accept deliberate harm being done to human beings and other living creatures for a variety of reasons. Whether it is self-defence, the need to kill animals for food, or some other reason, many – if not most – people who consider themselves to have 'good morals' will generally agree to the intentional killing of other beings if there is adequate justification for doing so. However, one cannot justify killing without complete knowledge of what those who are killed go through. Thus, people who choose to eat meat should find out about how the animals they consume are reared and killed. Otherwise, people cannot truly accept full responsibility for their decision-making.

Which one of the following best illustrates the principle used in the above argument?

A Farmers who need to kill crop-eating insects should find out which pesticides are the least harmful to other kinds of wildlife.

B A lawyer prosecuting an individual for murder should be aware of any serious difficulties in the life of the defendant in the years leading up to the crime.

C Scientists who use dead animal specimens for the purpose of an experiment should be certain there are no alternative research methods available.

D Citizens who support imposing the death penalty in some criminal cases should educate themselves about the procedures used to administer it.

E A police officer who accidentally kills someone in the line of duty should be willing to tell the victim's family about the circumstances of the death.

6 Six sacks each consist of one kind of fruit: apples, oranges or limes.

The weights of the sacks are:

8 kg, 13 kg, 17 kg, 18 kg, 22 kg, 24 kg

The total weight of all the apples is twice the total weight of all the limes, and there is only one sack of oranges.

What is the weight of the sack of oranges?

A 13 kg

B 17 kg

C 18 kg

D 22 kg

E 24 kg

 © Cambridge University Press & Assessment 2022

7 There are 10 students in a class and they like visiting each other. A visit means that one student visits the home of another student. We know that each student in the class has visited the same number of students. No two students in the class have both visited each other.

What is the maximum number of students that a student in this class could have visited?

A 2

B 4

C 5

D 8

E 9

 © Cambridge University Press & Assessment 2022

8 I am planning a one-way flight and I can fly with one of the following five companies.

company	*BritAir*	*WassAir*	*EasAir*	*TowAir*	*MistAir*
price of flight ($)	53	59	78	72	60
price of priority boarding ($)	25	15	–	5	20
maximum cabin bag size with priority boarding (cm)*	55 × 40 × 20	50 × 40 × 23	–	58 × 48 × 28	55 × 38 × 20
maximum cabin bag size without priority boarding (cm)*	35 × 30 × 20	40 × 30 × 18	56 × 45 × 25	45 × 28 × 20	38 × 35 × 20

* None of the three maximum dimensions can be exceeded.

I have two bags, one of size 52 × 40 × 22 cm and one of size 40 × 30 × 20 cm. I am happy to take either bag with me. I need to have priority boarding.

Which company should I choose if I wish to spend as little as possible?

A EasAir

B BritAir

C WassAir

D TowAir

E MistAir

 © Cambridge University Press & Assessment 2022

9 Volunteers for a coastal conservation charity have cleaned beaches since the late 1990s and have recorded the number of items collected. Three items found on the beach by volunteers which have seen an increase are shown below in the table.

year	*cigarette butts*	*plastic bottles*	*straws and stirrers*
1997	1 547 346	263 982	249 202
2017	2 412 151	1 578 834	749 360

Which one of the following graphs could show the percentage increase in items collected between 1997 and 2017?

A

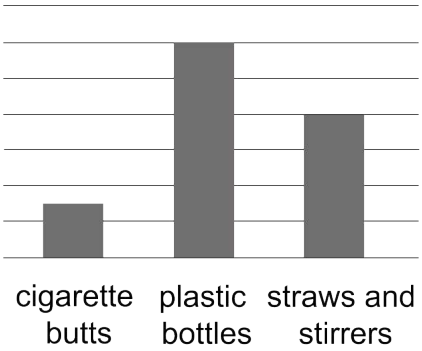

B

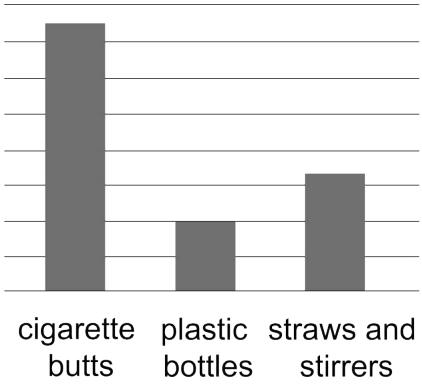

C

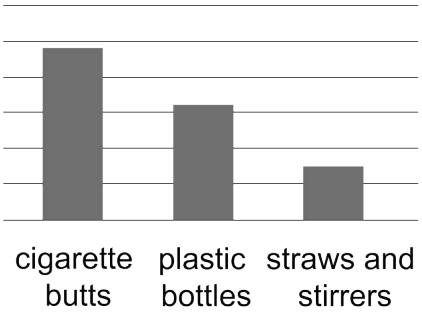

D

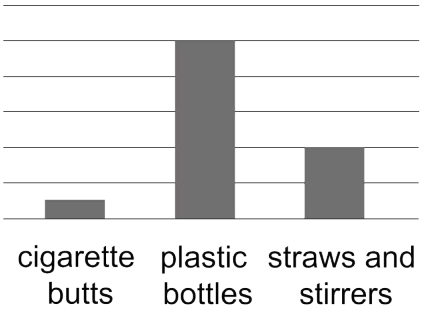

E

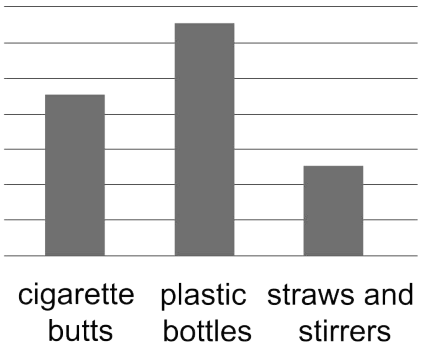

 © Cambridge University Press & Assessment 2022

10 On a volcanic island, scientists plan to install sensors to monitor ground motions and predict volcanic activity.

The outline of the island is shown below. The shaded area in the middle is the volcano.

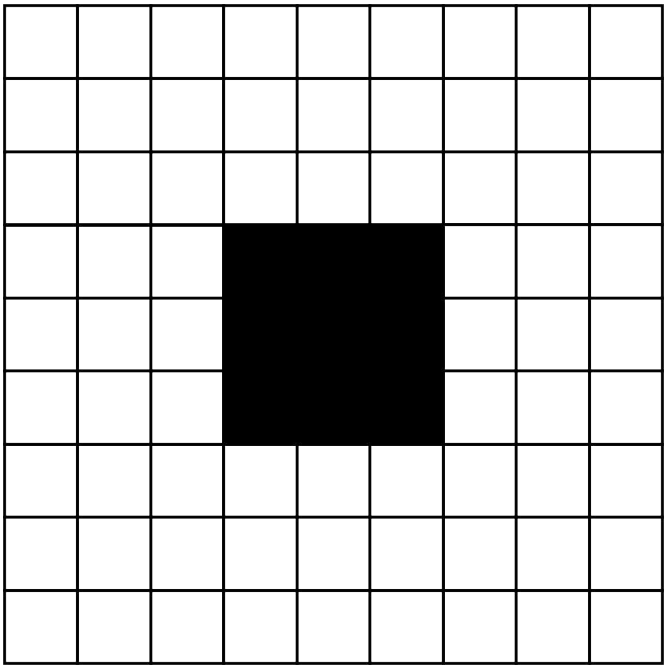

A sensor cannot be installed on the volcano itself but can be installed on any one of the other squares. Each sensor takes measurements from the square on which it is installed and the surrounding squares. See an example below.

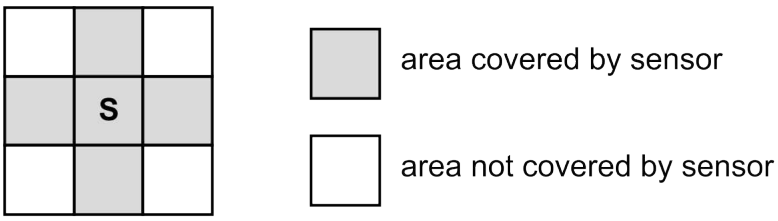

S - sensor installed

What is the minimum number of sensors that need to be installed to take measurements of the entire area of the island (excluding the volcano)?

A 6

B 10

C 16

D 20

E 22

 © Cambridge University Press & Assessment 2022

11 Which one of the following spoke to the United Nations on 12th July 2013 to call for a worldwide access to education?

A Aung San Suu Kyi

B Malala Yousafzai

C Benazir Bhutto

D Kofi Annan

E Barack Obama

12 Which of the following dancing traditions is NOT correctly matched to its place of origin?

A Mambo – Cuba

B Bharatnatyam – India

C Samba – Brazil

D Flamenco – Argentina

E Haka – New Zealand

13 Which one of the following novels was awarded the Pulitzer Prize for Fiction in 1953?

A *Moby Dick* by Herman Melville

B *The Great Gatsby* by Francis Scott Fitzgerald

C *The Catcher in the Rye* by J. D. Salinger

D *On the Road* by Jack Kerouac

E *The Old Man and the Sea* by Ernest Hemingway

 © Cambridge University Press & Assessment 2022

14 Which of the following European languages is NOT categorised as a Slavic language?

A Polish

B Slovene

C Lithuanian

D Ukrainian

E Czech

15 Which of the following philosophers is considered one of the founders of analytic philosophy?

A Gottfried Wilhelm Leibniz

B Bertrand Russell

C Francis Bacon

D Michel Foucault

E Hans Jonas

16 Amongst the following modern-day countries, which never had any region form part of the Roman Empire?

A Egypt

B Portugal

C Slovenia

D Belgium

E Denmark

 © Cambridge University Press & Assessment 2022

17 Which one of the following chemical elements was discovered by Marie and Pierre Curie?

A Uranium

B Hydrogen

C Polonium

D Nitrogen

E Boron

18 Which of the following European countries does NOT recognise a denomination of Christianity as its state religion?

A Spain

B England

C Malta

D Greece

E Denmark

19 Which one of the following succeeded Jean-Claude Juncker as President of the European Commission on 1 December 2019?

A José Manuel Barroso

B Ursula von der Leyen

C Christine Lagarde

D Mario Draghi

E Alexis Tsipras

 © Cambridge University Press & Assessment 2022

20 Which of the following countries never had a female prime minister in the 20th century?

A United Kingdom

B Israel

C India

D Sweden

E Pakistan

 © Cambridge University Press & Assessment 2022

21 Which diagram shows the correct hydrogen bonds between bases of a section of DNA?

A

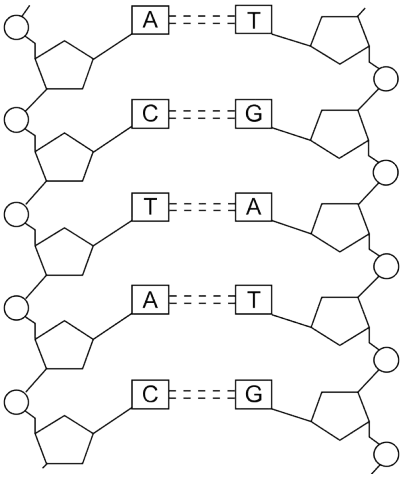

B

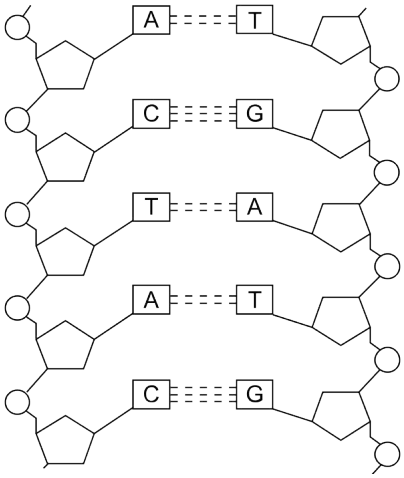

C

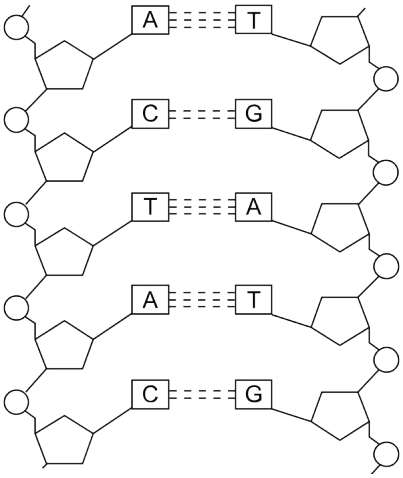

D

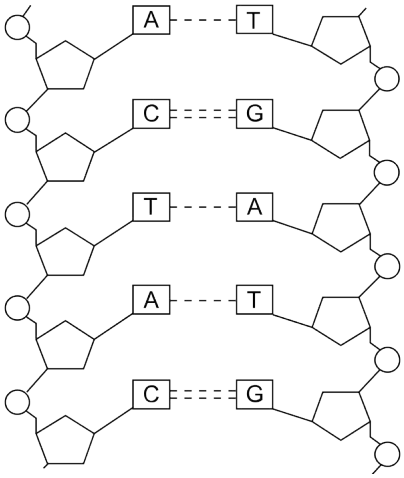

E

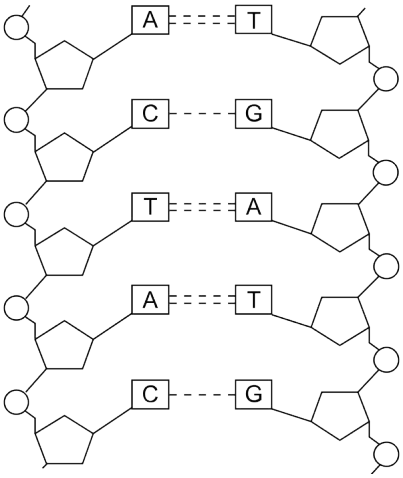

 © Cambridge University Press & Assessment 2022

22 The effect of temperature and pH on the activity of each of the enzymes P and Q was investigated.

When investigating the effect of temperature, the optimum pH for each enzyme was used. This was 4.5 for P and 9.5 for Q.

When investigating the effect of pH, the optimum temperature for each enzyme was used. This was 55 °C for P and 25 °C for Q.

Using this information, which graph could show the results from one of these investigations?

A

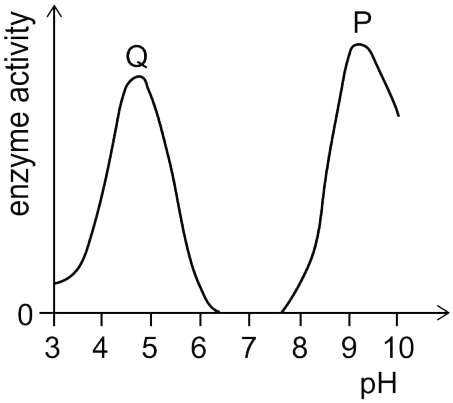

B

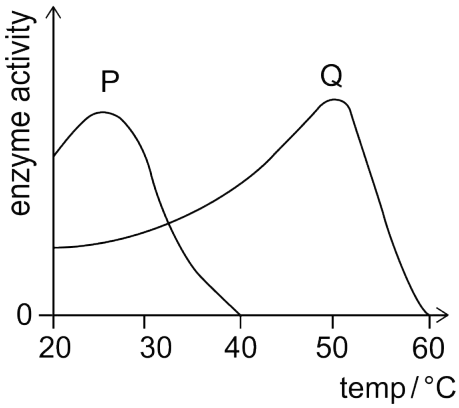

C

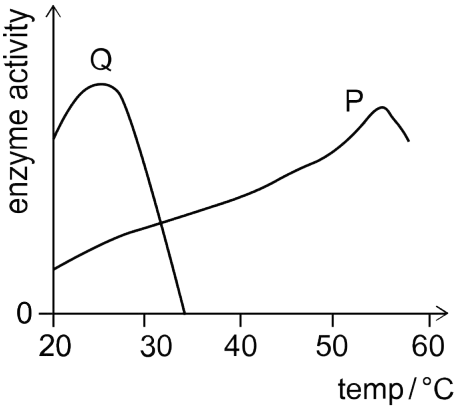

D

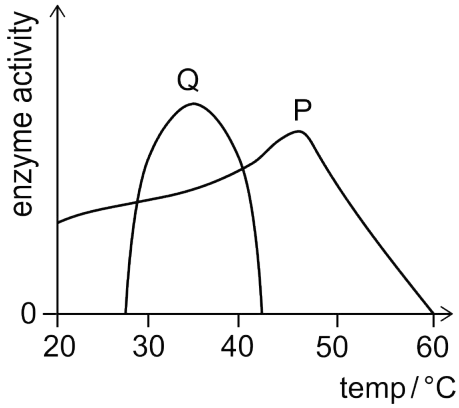

E

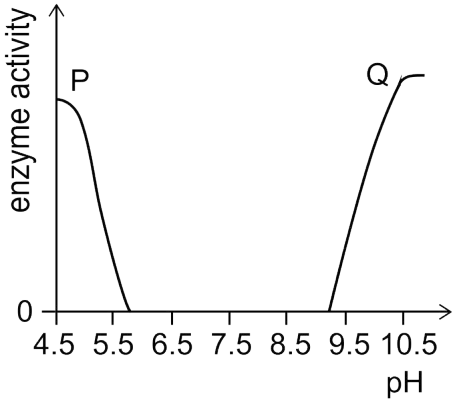

 © Cambridge University Press & Assessment 2022

23 Which of the following could be found within a molecule that has just been made by transcription in a healthy human pancreatic cell?

1 adenine

2 peptide bonds

3 phosphodiester bonds

4 ribose

A 1, 2, 3 and 4

B 2 and 4 only

C 2 and 3 only

D 1, 2 and 3 only

E 1, 3 and 4 only

 © Cambridge University Press & Assessment 2022

24 The following diagram shows a U-tube at the start of an experiment. It contains two solutions, separated by a membrane. Both solutions contain sucrose, glucose and maltose in water.

The membrane allows the passage of water and all three sugars.

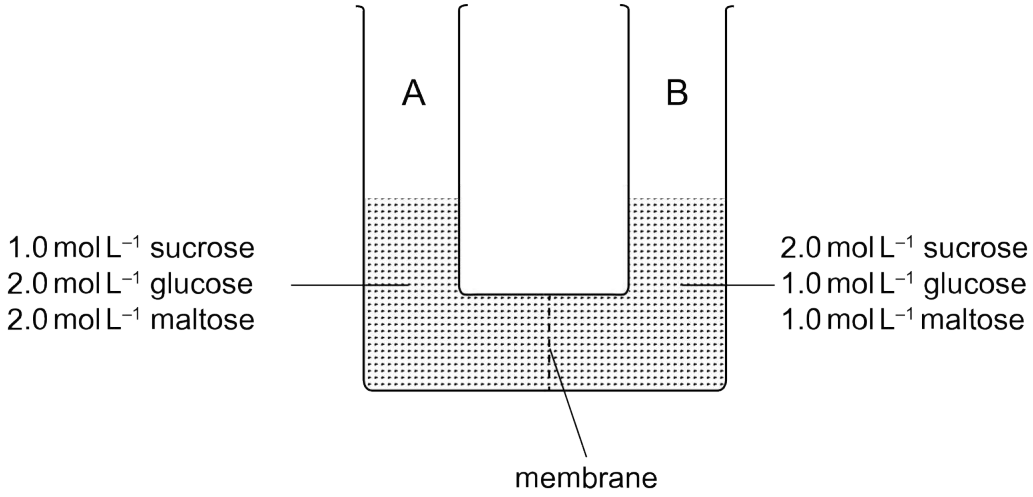

Which option correctly identifies what happens within the first few seconds?

A There will be no net movement of sugars.

B There will be net movement of sucrose from side A to B.

C There will be net movement of glucose from side B to A.

D There will be net movement of maltose from side A to B.

E Solution level will increase in side B and decrease in side A.

25 Glycoproteins are formed from amino acids and carbohydrates.

What is the order in which organelles are used to make membrane-associated glycoproteins?

A rough endoplasmic reticulum → Golgi apparatus → smooth endoplasmic reticulum

B rough endoplasmic reticulum → vesicles → Golgi apparatus

C lysosomes → rough endoplasmic reticulum → Golgi apparatus

D Golgi apparatus → vesicles → rough endoplasmic reticulum

E Golgi apparatus → lysosomes → smooth endoplasmic reticulum

 © Cambridge University Press & Assessment 2022

26 Which row shows the site of alcohol fermentation in yeast and the site of lactic acid fermentation in human muscle cells?

	alcohol fermentation in yeast	*lactic acid fermentation in human muscle cells*
row 1	mitochondrial cristae	mitochondrial cristae
row 2	cytoplasm	mitochondrial cristae
row 3	cytoplasm	cytoplasm
row 4	mitochondrial matrix	cytoplasm
row 5	mitochondrial matrix	mitochondrial matrix

A row 1

B row 2

C row 3

D row 4

E row 5

27 Which of the following statements about photosynthesis is/are correct?

1 The site of the light-dependent reactions is the thylakoids and the products of these reactions include ATP and oxygen.

2 The site of the light-independent reactions is the stroma and the products of these reactions include carbohydrates and carbon dioxide.

3 Chlorophyll that is embedded in the chloroplast outer membrane uses light to split water molecules.

A 1 only

B 3 only

C 1 and 2 only

D 2 and 3 only

E 1, 2 and 3

 © Cambridge University Press & Assessment 2022

28 The photomicrograph shows a section of a plant root tip with cells showing different stages of the cell cycle. Five of the cells have been labelled.

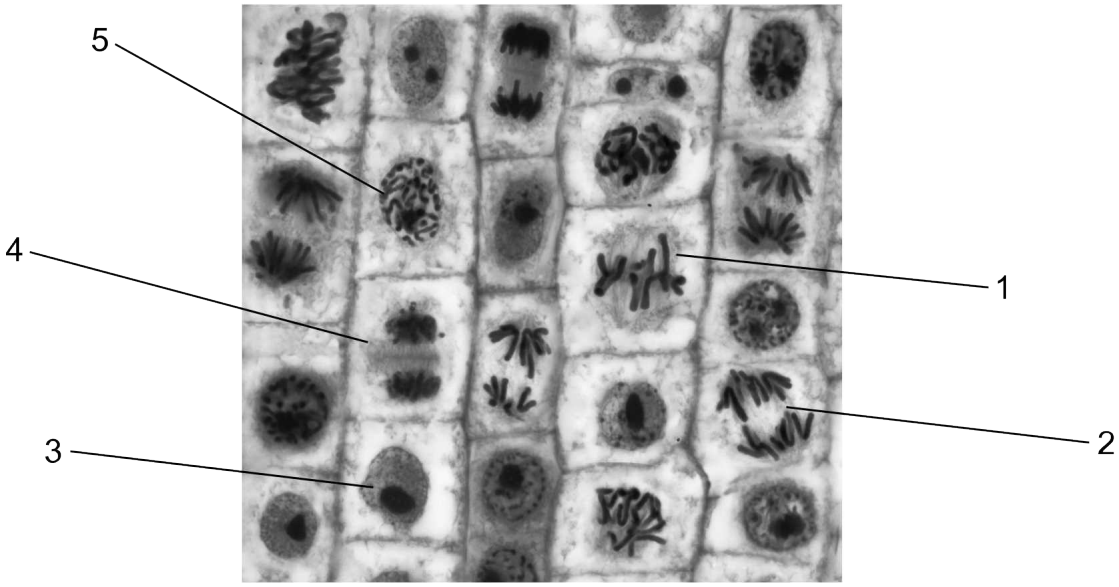

Which cell (1-5) shows anaphase?

A 1

B 2

C 3

D 4

E 5

 © Cambridge University Press & Assessment 2022

29 A male child has haemophilia. Neither parent has the condition. The parents have a second child.

Which of the following statements could be correct about this family?

1 There is a 25% chance that the second child is a boy with haemophilia.

2 There is a 75% chance that the second child does not show the condition.

3 There is a 50% chance that the mother is a carrier.

[Assume no other mutations.]

A 1 only

B 2 only

C 3 only

D 1 and 2 only

E 2 and 3 only

 © Cambridge University Press & Assessment 2022

30 There is an inherited condition in cats that leads to them having six toes rather than five toes on each paw.

The allele that causes six toes is dominant.

The pedigree diagram shows the inheritance of this condition in a family of cats. Three of the cats have been labelled.

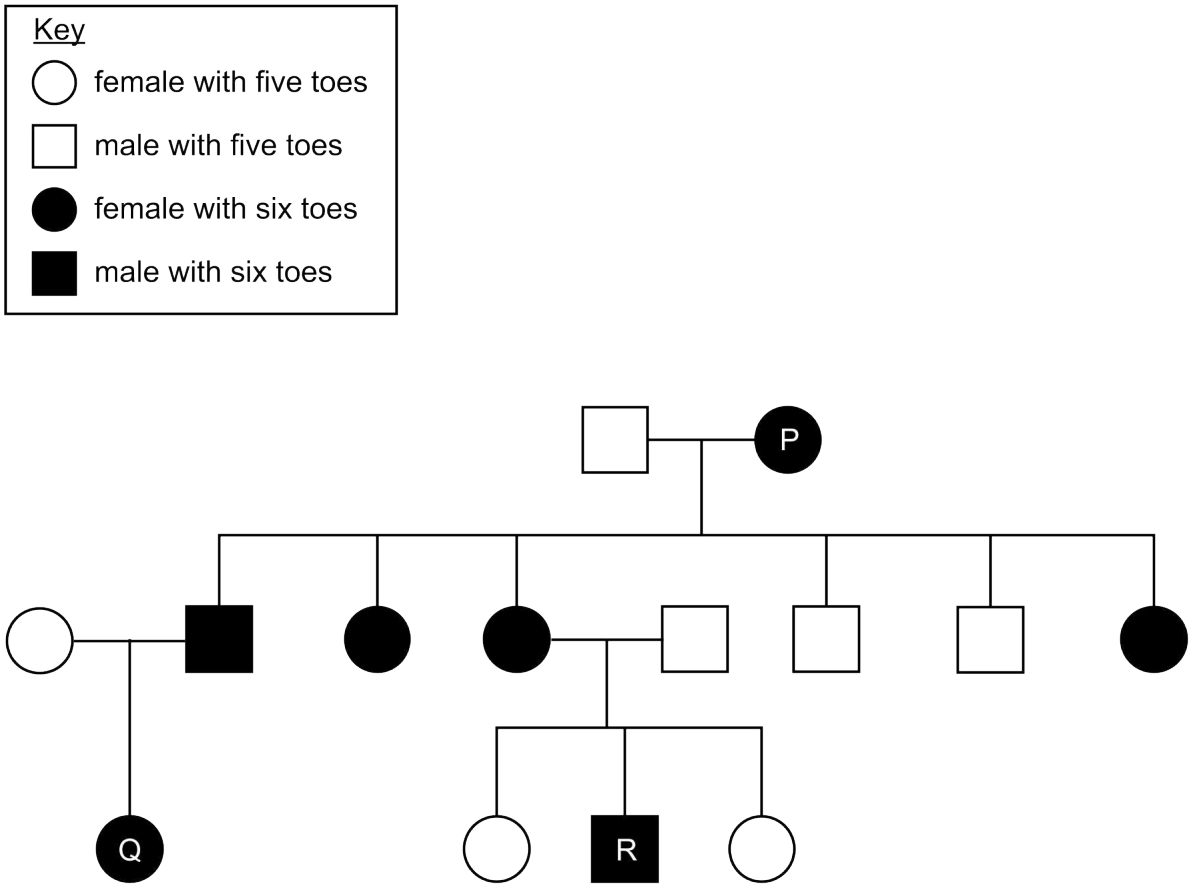

Which of the following statements about this inheritance is/are correct?

1 Cat P could be homozygous for the condition.

2 Over two generations, 12 cats were produced in the cross-breeding.

3 Breeding cat Q with cat R could produce 3 offspring, each with a different genotype.

A 3 only

B 2 only

C 1 only

D 1 and 2 only

E 1 and 3 only

 © Cambridge University Press & Assessment 2022

31 The diagrams each show a section of the cell surface membrane to illustrate the fluid mosaic model.

Which diagram is most accurate?

Key
black shape represents cholesterol grey shape represents protein

A

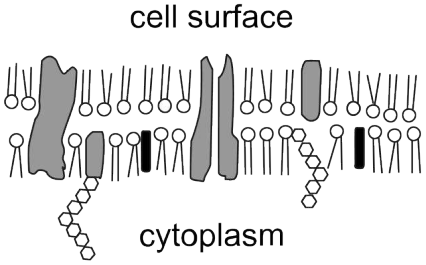

B

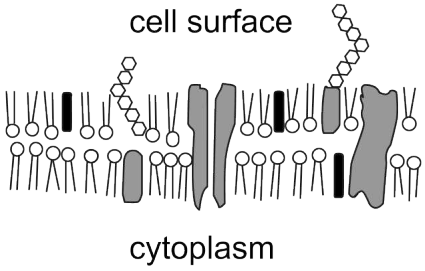

C

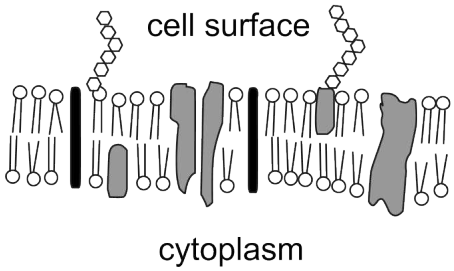

D

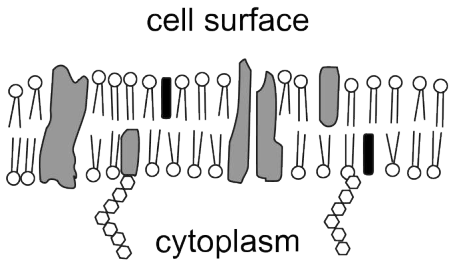

E

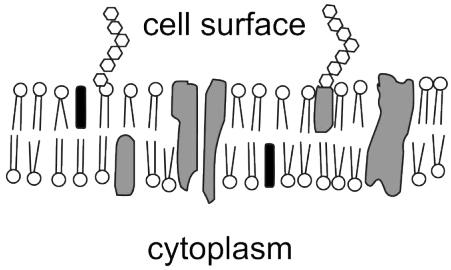

 © Cambridge University Press & Assessment 2022

32 Which of the following changes occur during contraction of the atria in a healthy human heart?

	volume in the atria	*pressure in the atria*	*atrioventricular valves*
row 1	decreases	increases	close
row 2	decreases	decreases	close
row 3	increases	increases	open
row 4	increases	decreases	open
row 5	decreases	increases	open

A row 1

B row 2

C row 3

D row 4

E row 5

 © Cambridge University Press & Assessment 2022

33 The diagram shows a glomerulus and part of a nephron in the kidney of a healthy human.

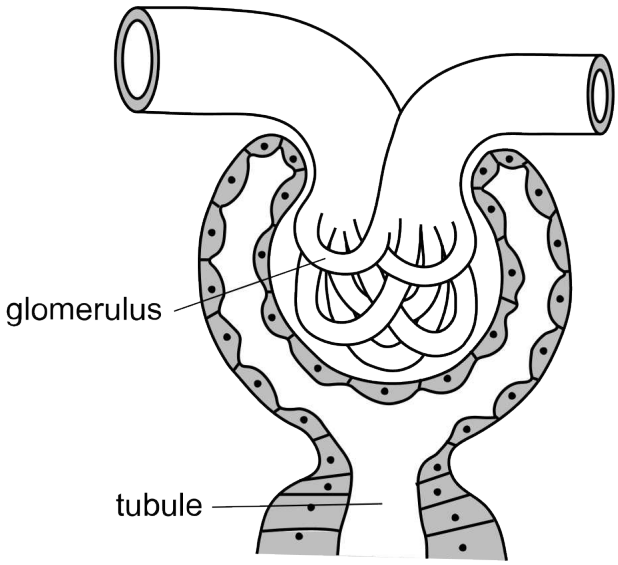

Which of the following cause(s) water to move from the glomerulus into the tubule?

1 An increase in pressure caused by the left ventricle of the heart.

2 The effect of blood proteins on the direction of osmosis.

3 An increase in pressure of the liquid in the tubule.

A 1 only

B 2 only

C 3 only

D 1 and 2 only

E 2 and 3 only

 © Cambridge University Press & Assessment 2022

34 Drug Q reduces the release of vasopressin (ADH) into the bloodstream of a healthy human.

Which organ releases ADH into the blood, and what is the effect of drug Q on the concentration of urea in the urine?

[Assume that the production of urea remains constant.]

	organ releasing ADH into the blood	*effect of drug Q on the concentration of urea in the urine*
row 1	kidney	decreases
row 2	kidney	increases
row 3	liver	no change
row 4	pituitary	decreases
row 5	pituitary	increases

A row 1

B row 2

C row 3

D row 4

E row 5

35 In the nervous system, which of the following pairs work in opposition to each other to control their target organs?

A brain and spinal cord

B central and peripheral nervous systems

C reflex and voluntary pathways

D sensory and motor pathways

E sympathetic and parasympathetic nervous systems

 © Cambridge University Press & Assessment 2022

36 Which of the following acids is/are weak?

1 $H_2CO_3(aq)$

2 HCOOH(aq)

3 $HNO_3(aq)$

A 1 only

B 2 only

C 3 only

D 1 and 2 only

E 2 and 3 only

37 Which of the following particles has the same number of neutrons as the ${}^{79}_{35}Br^-$ ion?

A ${}^{78}_{34}Se$

B ${}^{81}_{35}Br^{2+}$

C ${}^{81}_{35}Br^-$

D ${}^{82}_{36}Kr$

E ${}^{101}_{44}Ru^+$

 © Cambridge University Press & Assessment 2022

38 Equal volumes of liquids are mixed as the following pairs:

1 heptane and hexane

2 water and methanol

3 hexane and water

Which of the pairs form(s) a homogenous mixture?

A 1 only

B 3 only

C 1 and 2 only

D 2 and 3 only

E 1, 2 and 3

 © Cambridge University Press & Assessment 2022

39 Consider the following general equation that describes one way of synthesising a particular type of BIOFUEL, represented by Y.

X represents a neutral (uncharged) organic molecule involved in the reaction.

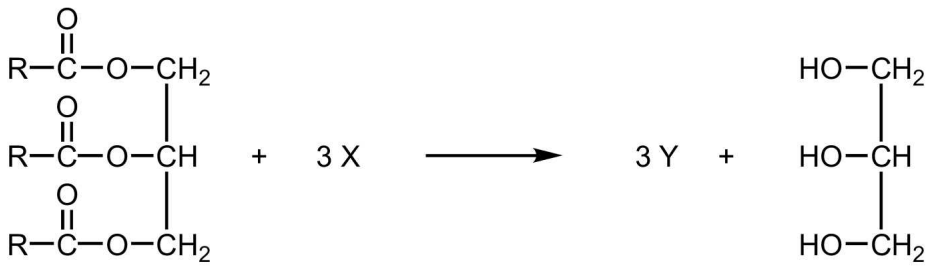

Which of the following statements about the reaction are correct?

1 Addition of an enzyme is an essential condition.

2 Y is an ester.

3 X contains an alcohol group.

A none of them

B 2 and 3 only

C 1 and 3 only

D 1 and 2 only

E 1, 2 and 3

 © Cambridge University Press & Assessment 2022

40 Which of the following substances in pure liquid form has/have hydrogen bonds between their molecules?

1 H_2O

2 HF

3 CH_4

A 1 only

B 2 only

C 3 only

D 1 and 2 only

E 2 and 3 only

41 In which of the following does the central atom share all of its outer shell electrons?

1 BF_3

2 NH_4^+

3 CO_2

[Atomic numbers: H = 1; B = 5; C = 6; N = 7; O = 8; F = 9]

A 1, 2 and 3

B 1 and 2 only

C 1 and 3 only

D 2 and 3 only

E none of them

 © Cambridge University Press & Assessment 2022

42 In which of the following reactions does HCl act as a reducing agent?

A $NH_3 + HCl \rightarrow NH_4Cl$

B $Zn + 2HCl \rightarrow H_2 + ZnCl_2$

C $Mg(OH)_2 + 2HCl \rightarrow MgCl_2 + 2H_2O$

D $MnO_2 + 4HCl \rightarrow MnCl_2 + Cl_2 + 2H_2O$

E $Al_2O_3 + 6HCl \rightarrow 2AlCl_3 + 3H_2O$

43 Hydrogen sulfide gas was shaken with a solution of sodium hydroxide in a closed system. An equilibrium was rapidly established.

$$H_2S(g) + 2OH^-(aq) \rightleftharpoons S^{2-}(aq) + 2H_2O(l)$$

The experiment was repeated at the same temperature and pressure, but one additional substance was added to the equilibrium mixture.

Adding which of these substances, on its own, will increase the number of molecules of H_2S present at equilibrium?

1 hydrochloric acid

2 solid potassium hydroxide

3 sodium sulfide

A 1 only

B 2 only

C 1 and 3 only

D 1 and 2 only

E 2 and 3 only

 © Cambridge University Press & Assessment 2022

44 Barium sulfate is insoluble in water.

Aqueous solutions of barium chloride and sodium sulfate are mixed.

Which of the following equations is the SIMPLEST ionic equation for the reaction that occurs?

A $2Ba^{+}(aq) + SO_4^{2-}(aq) \rightarrow Ba_2SO_4(s)$

B $2BaCl(aq) + Na_2SO_4(aq) \rightarrow BaSO_4(s) + 2NaCl(aq)$

C $BaCl_2(aq) + Na_2SO_4(aq) \rightarrow BaSO_4(s) + 2NaCl(aq)$

D $Ba^{2+}(aq) + SO_4^{2-}(aq) \rightarrow BaSO_4(s)$

E $Ba^{2+}(aq) + 2Cl^{-}(aq) + 2Na^{+}(aq) + SO_4^{2-}(aq) \rightarrow BaSO_4(s) + 2Na^{+}(aq) + 2Cl^{-}(aq)$

45 Which of the following separation techniques can be used to obtain liquid ethanal from an aqueous mixture of ethanol, ethanal and ethanoic acid?

1 filtration

2 fractional distillation

3 centrifugation

A 1 only

B 2 only

C 3 only

D 1 and 2 only

E 1 and 3 only

 © Cambridge University Press & Assessment 2022

46 A metal oxide, MO, reacts with sulfuric acid according to the following equation:

$$MO + H_2SO_4 \rightarrow MSO_4 + H_2O$$

2.8 g of the metal oxide requires 25 mL of 2.0 mol L^{-1} sulfuric acid for complete reaction.

What is the relative atomic mass (A_r) of the metal?

[A_r value: O = 16]

A 24

B 40

C 56

D 96

E 112

47 0.365 g of hydrogen chloride is dissolved in sufficient water to make 10 litres of solution.

What is the pH of the HCl(aq) solution formed, at 25 °C?

[A_r values: H = 1.0; Cl = 35.5]

A 0.01

B 2.0

C 3.0

D 4.0

E 1.0

 © Cambridge University Press & Assessment 2022

48 Phosphorus is in Group V of the Periodic Table.

What is the shape and the bond angle for the PH_4^+ ion?

	shape made by the atoms in the PH_4^+ *ion*	H–P–H *bond angle in* PH_4^+
row 1	tetrahedral	109.5°
row 2	trigonal bipyramidal	120°
row 3	tetrahedral	90°
row 4	trigonal planar	120°
row 5	trigonal bipyramidal	109.5°

A row 1

B row 2

C row 3

D row 4

E row 5

49 Which of the following organic compounds are structural isomers of each other?

1 cyclohexene

2 methylcyclopentane

3 hexane

4 hex-1-ene

5 3-methylpent-2-ene

A 2 and 3 only

B 2 and 4 only

C 1 and 2 only

D 2, 4 and 5 only

E 1, 4 and 5 only

 © Cambridge University Press & Assessment 2022

50 Which of the following lists the given elements in order of DECREASING first ionisation energies?

[Atomic numbers: Li = 3; Be = 4; Na = 11]

A Na, Be, Li

B Li, Be, Na

C Li, Na, Be

D Be, Na, Li

E Be, Li, Na

 © Cambridge University Press & Assessment 2022

51 Evaluate

$$\sqrt[3]{\frac{\left(9 \times 10^{4}\right)^{2} - 10^{8} + 1.2 \times 10^{11}}{10^{-1} - 9.8 \times 10^{-2}}}$$

A 400

B 8000

C 10 000

D 40 000

E 100 000

52 A block sliding along a flat horizontal surface at an initial velocity of $2.0\,\mathrm{m\,s^{-1}}$ experiences a constant resistive force of 4.0 N that brings it to rest in a distance of 2.0 m.

What is the mass of the block?

A 0.25 kg

B 0.50 kg

C 2.0 kg

D 4.0 kg

E 8.0 kg

 © Cambridge University Press & Assessment 2022

53 Find the area enclosed by the three lines

$$y = 0$$

$$y = 2x - 4$$

$$y = 11 - x$$

A 3

B 27

C $22\frac{1}{2}$

D $37\frac{1}{2}$

E 39

54 A fixed mass of an ideal gas is compressed slowly so that its volume halves and its pressure doubles.

Which of the following statements about the gas after this change is/are correct?

1 The final temperature of the gas is the same as before the change.

2 The final internal energy of the gas is the same as before the change.

3 The final mean kinetic energy of the particles of the gas is the same as before the change.

A 1 only

B 1, 2 and 3

C 2 and 3 only

D 1 and 3 only

E none of them

 © Cambridge University Press & Assessment 2022

55 Which of the following is a simplification of

$$\frac{2x^2 - 9x - 18}{x^2 - 6x} - \frac{3x^2 + 8x - 3}{x^2 + 3x}$$

A $2 - \frac{1}{x}$

B $\frac{2}{x} - 1$

C $\frac{4}{x} - 1$

D $\frac{4}{x} - 2$

E $4 - x$

56 An 18 V battery and a 3.0 Ω resistor are connected in series with each other, and in series with a parallel arrangement of a 3.0 Ω resistor and a 6.0 Ω resistor.

What is the current in the battery?

[Assume that the battery has no internal resistance.]

A 1.5 A

B 3.0 A

C 3.6 A

D 5.1 A

E 9.0 A

 © Cambridge University Press & Assessment 2022

57 The mean of five non-zero positive integers is 20.

The median is 24.

What is the maximum possible value for the largest number?

A 48

B 49

C 50

D 73

E 78

58 A long single coil of wire is connected directly to an ammeter which is used to indicate the direction of the current in the wire. As the N-pole of a bar magnet is inserted into the left-hand end of the coil, the ammeter indicates a current in a certain direction.

Which other action, performed separately, produces a current in the same direction?

A withdrawing the S-pole of the magnet from the right-hand end of the coil

B withdrawing the N-pole of the magnet from the left-hand end of the coil

C inserting the S-pole of the magnet into the left-hand end of the coil

D inserting the S-pole of the magnet into the right-hand end of the coil

E inserting the N-pole of the magnet into the right-hand end of the coil

 © Cambridge University Press & Assessment 2022

59

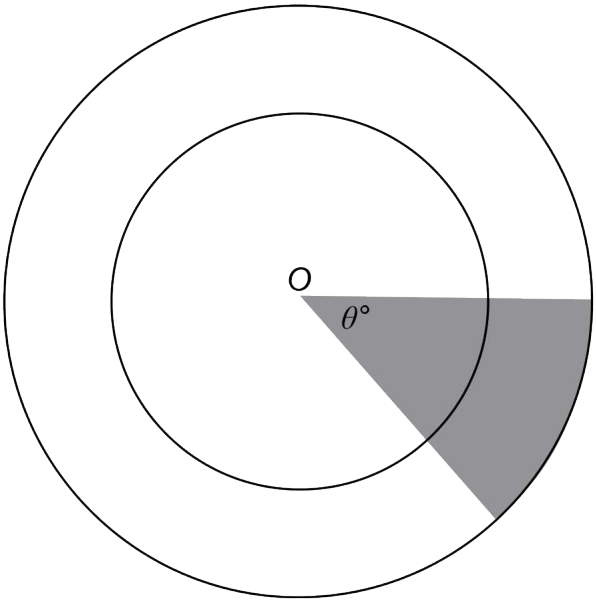

[diagram not to scale]

The diagram shows two concentric circles both with centre O. The angle of the shaded sector is $\theta°$.

The radius of the larger circle is 50% greater than the radius of the smaller circle.

The total area of the smaller circle is $36\pi\,\text{cm}^2$.

The area of the shaded sector is $\frac{27\pi}{8}\,\text{cm}^2$.

What is the value of θ?

A 15

B $8\frac{7}{16}$

C $16\frac{7}{8}$

D $22\frac{1}{2}$

E 30

 © Cambridge University Press & Assessment 2022

60 The simple pendulum of a tall clock swings freely backwards and forwards so that it passes through the vertical position at 1.0 second intervals.

Assuming that the motion of the pendulum is simple harmonic, what is the length of the pendulum?

[Take the gravitational field strength to be $10\,\mathrm{N\,kg^{-1}}$, and take π^2 to be 10.]

A 0.25 m

B 1.0 m

C 1.7 m

D 2.5 m

E 3.3 m

 © Cambridge University Press & Assessment 2022

IMAT 2022 PAST PAPER
ANSWER KEY

General Knowledge and Logical Reasoning

01. C
02. D
03. E
04. B
05. D
06. E
07. B
08. C
09. D
10. D
11. B
12. D
13. E
14. C
15. B
16. E
17. C
18. A
19. B
20. D

Biology

21. B
22. C
23. E
24. D
25. B
26. C
27. A
28. B
29. D
30. A
31. E
32. E
33. A
34. D
35. E

Chemistry

36. D
37. A
38. C
39. B
40. D
41. A
42. D
43. C
44. D
45. B
46. B
47. C
48. A
49. D
50. E

Physics and Mathematics

51. D
52. D
53. B
54. B
55. C
56. C
57. C
58. D
59. A
60. B